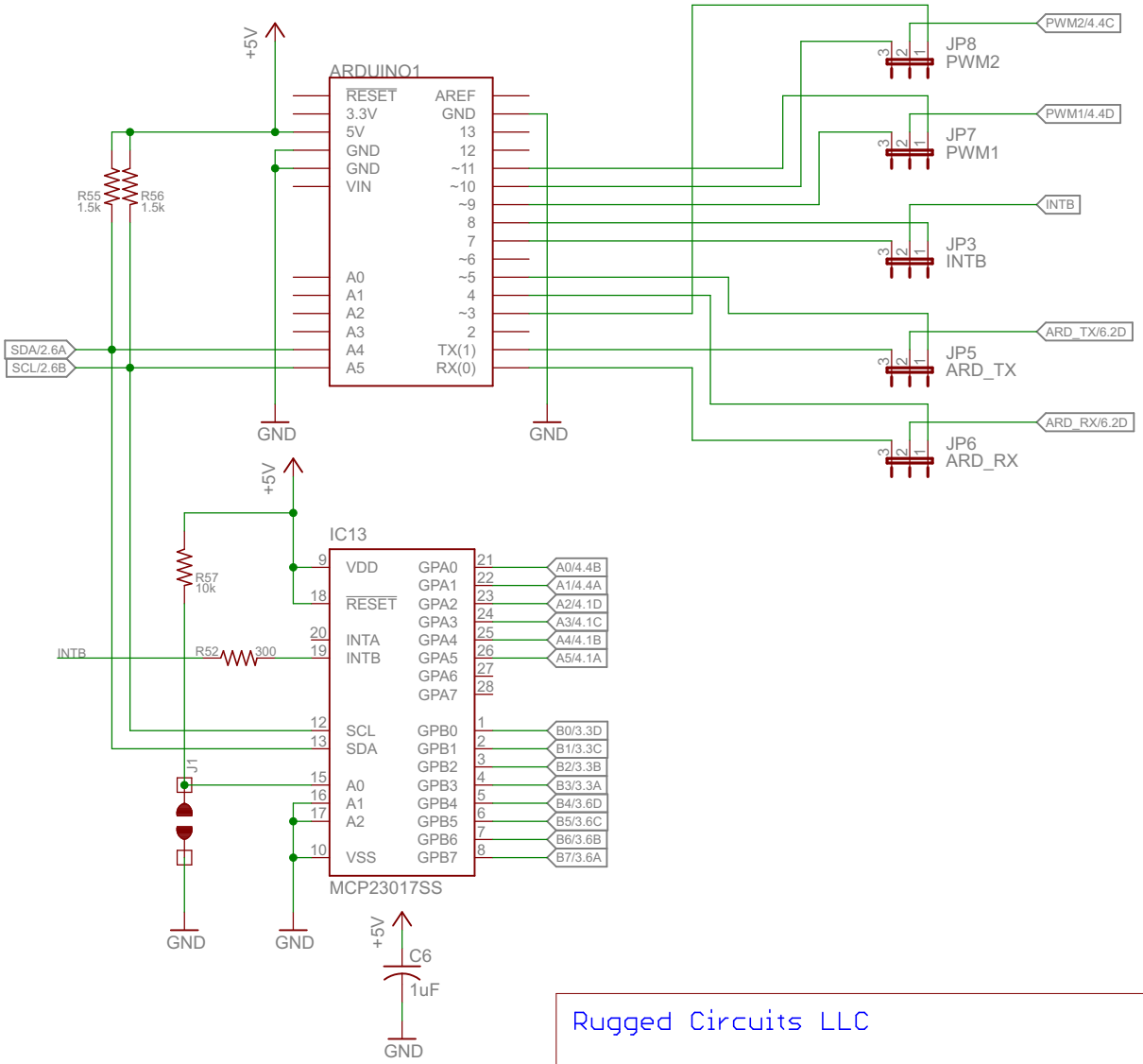

Rugged Circuits LLC

TITLE: Industrial Shield

Document Number:

REV:

Date: 10/14/2016 9:21:41 AM

Sheet: 1/6

Arduino Interface and I/O Expander

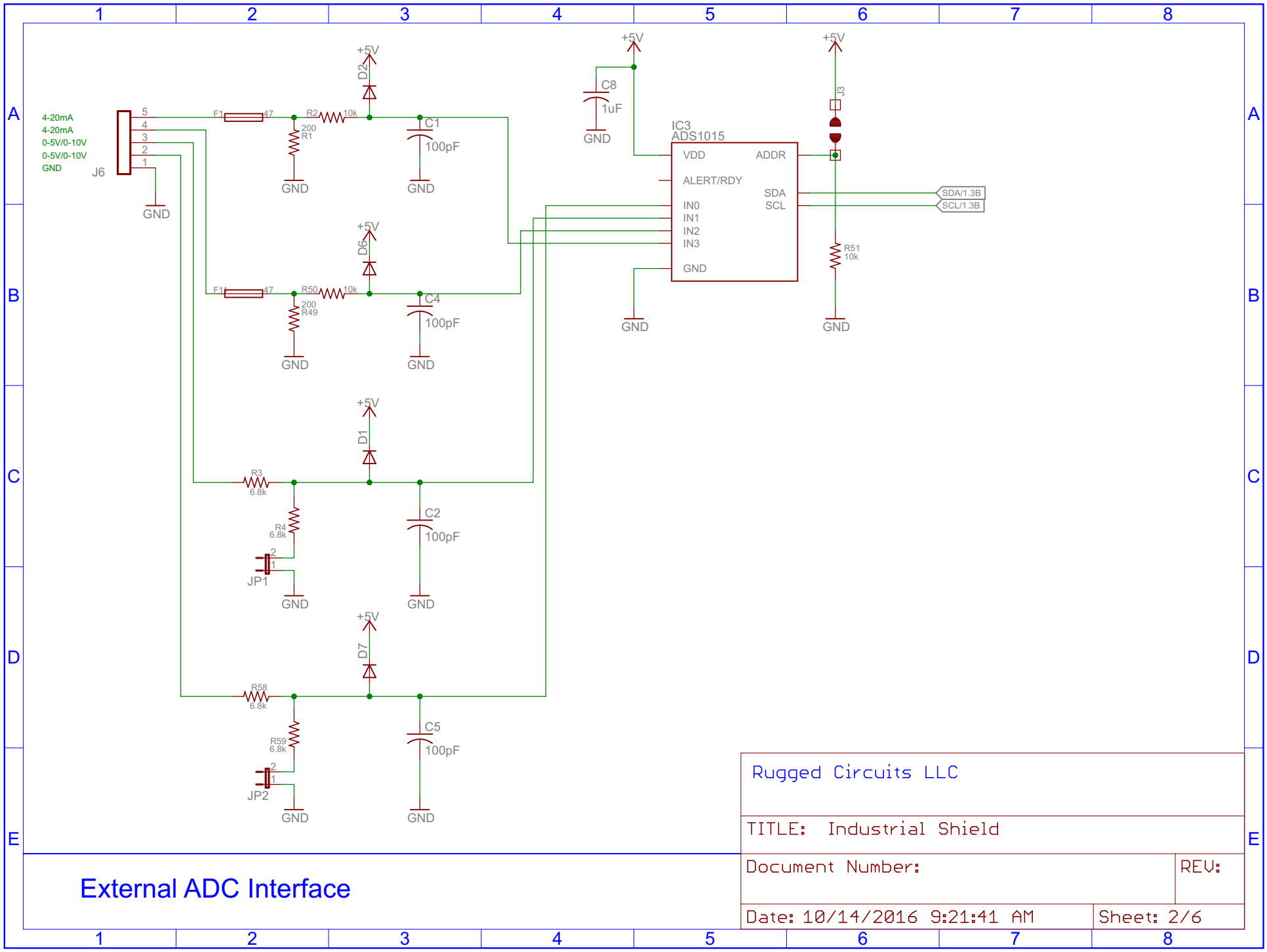

External ADC Interface

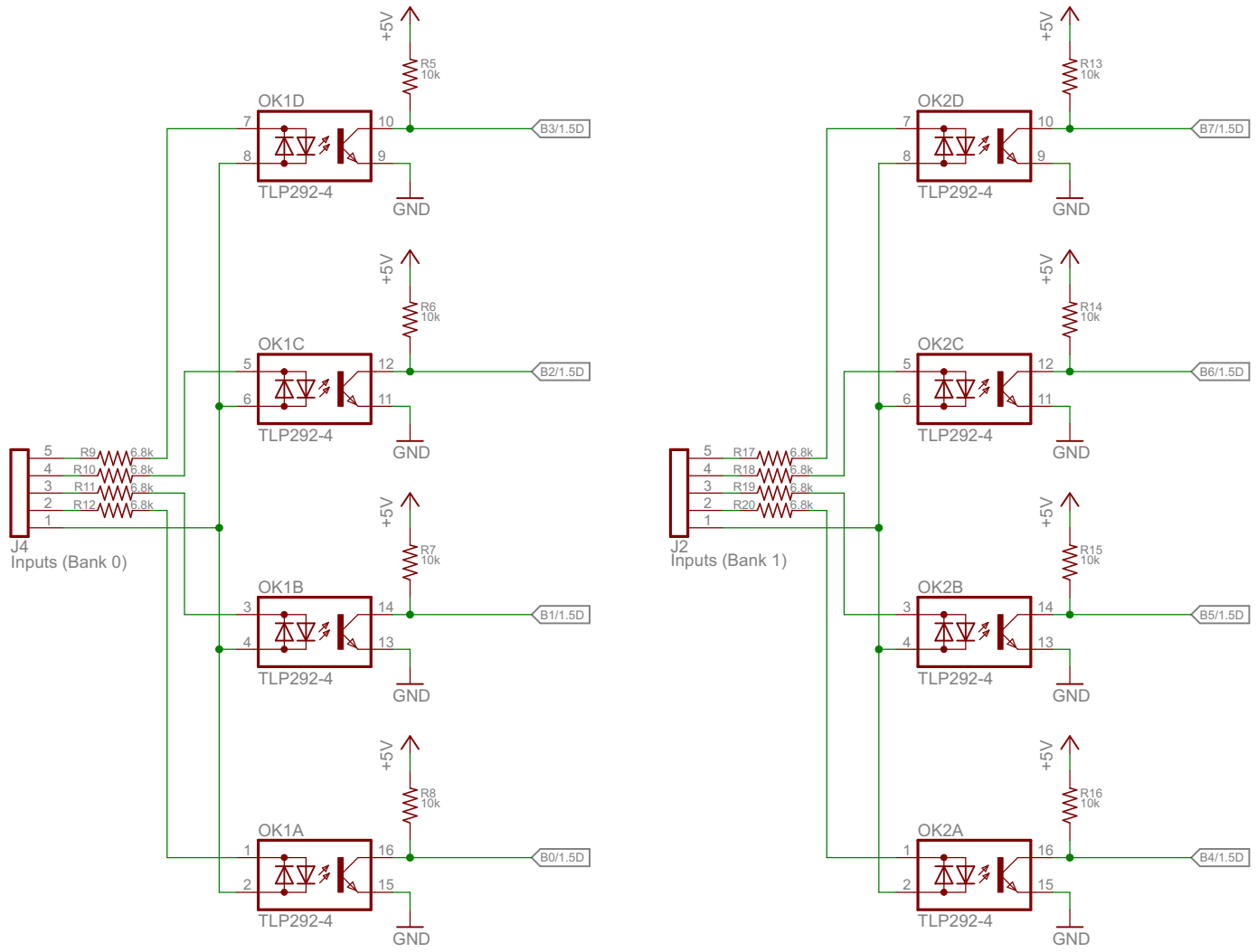

Rugged Circuits LLC

TITLE: Industrial Shield

Document Number:

REV:

Date: 10/14/2016 9:21:41 AM

Sheet: 3/6

Digital Inputs

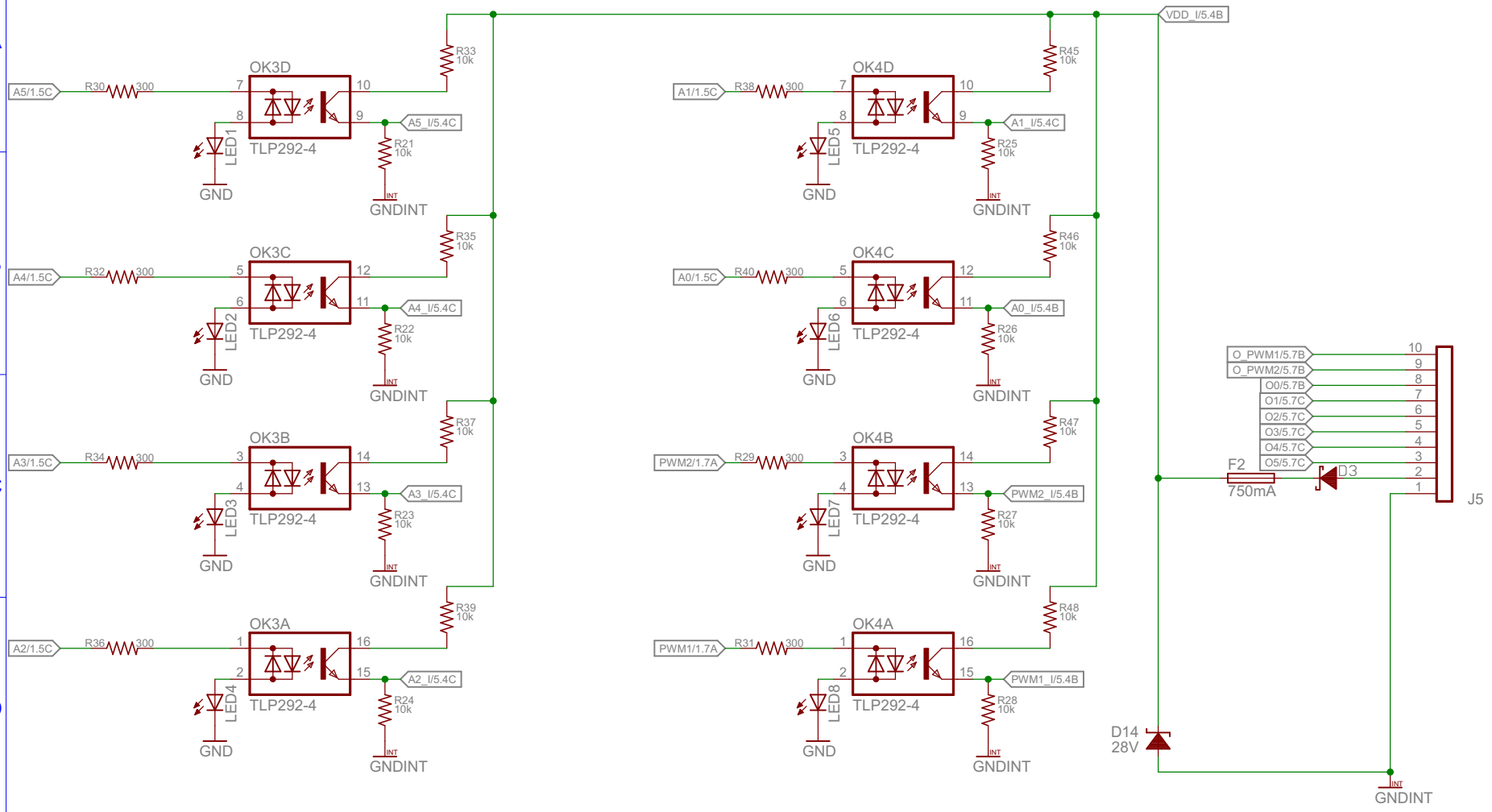

Rugged Circuits LLC

TITLE: Industrial Shield

Document Number:

REV:

Date: 10/14/2016 9:21:41 AM

Sheet: 4/6

Digital Output Isolation

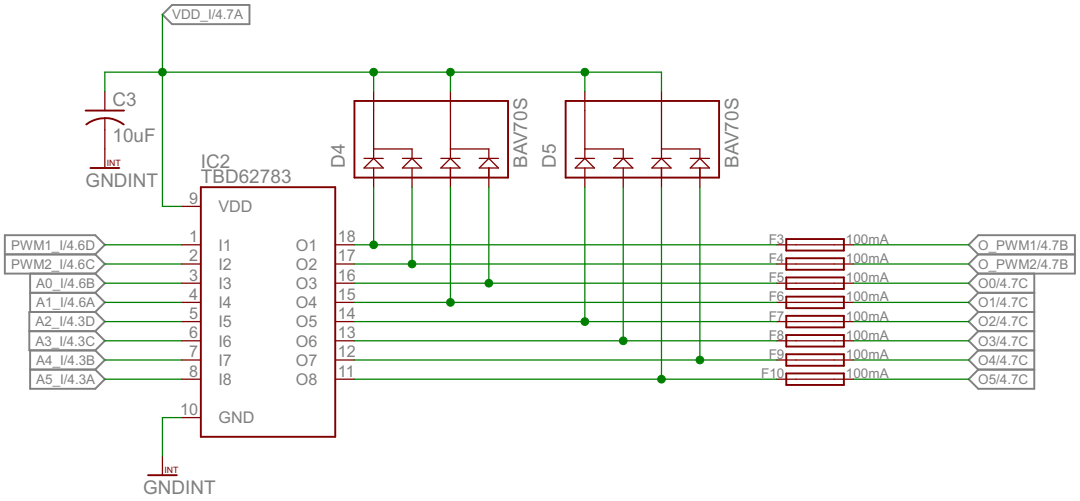

Rugged Circuits LLC

TITLE: Industrial Shield

Document Number:

REV:

Date: 10/14/2016 9:21:41 AM

Sheet: 5/6

Digital Output Driver and Protection

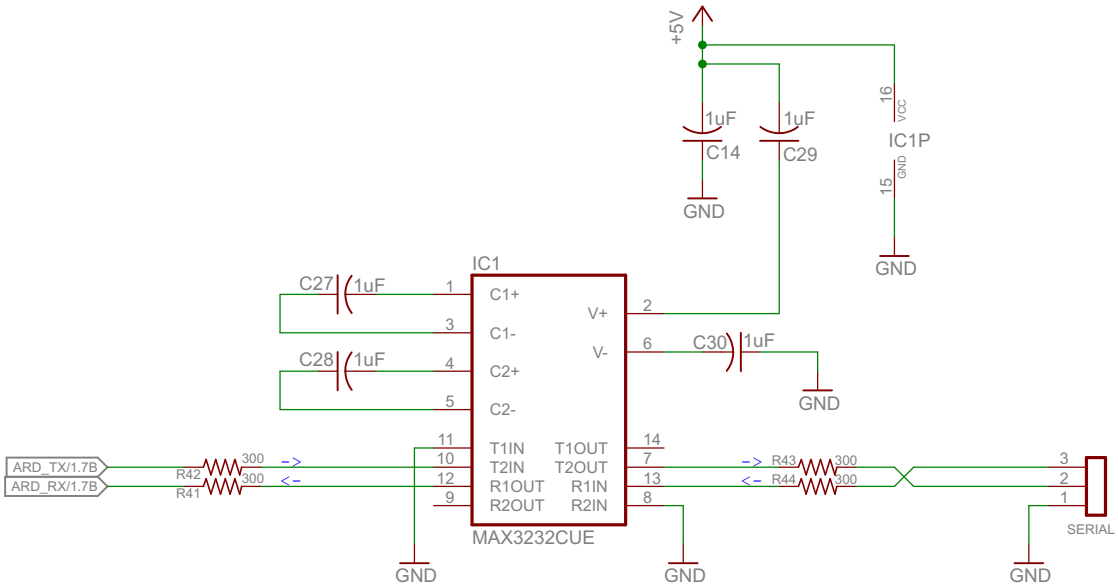

Rugged Circuits LLC

TITLE: Industrial Shield

Document Number:

REV:

Date: 10/14/2016 9:21:41 AM

Sheet: 6/6

RS232 Serial Interface